REVISIONS				
ZONE	REV	DESCRIPTION	DATE	APPROVED

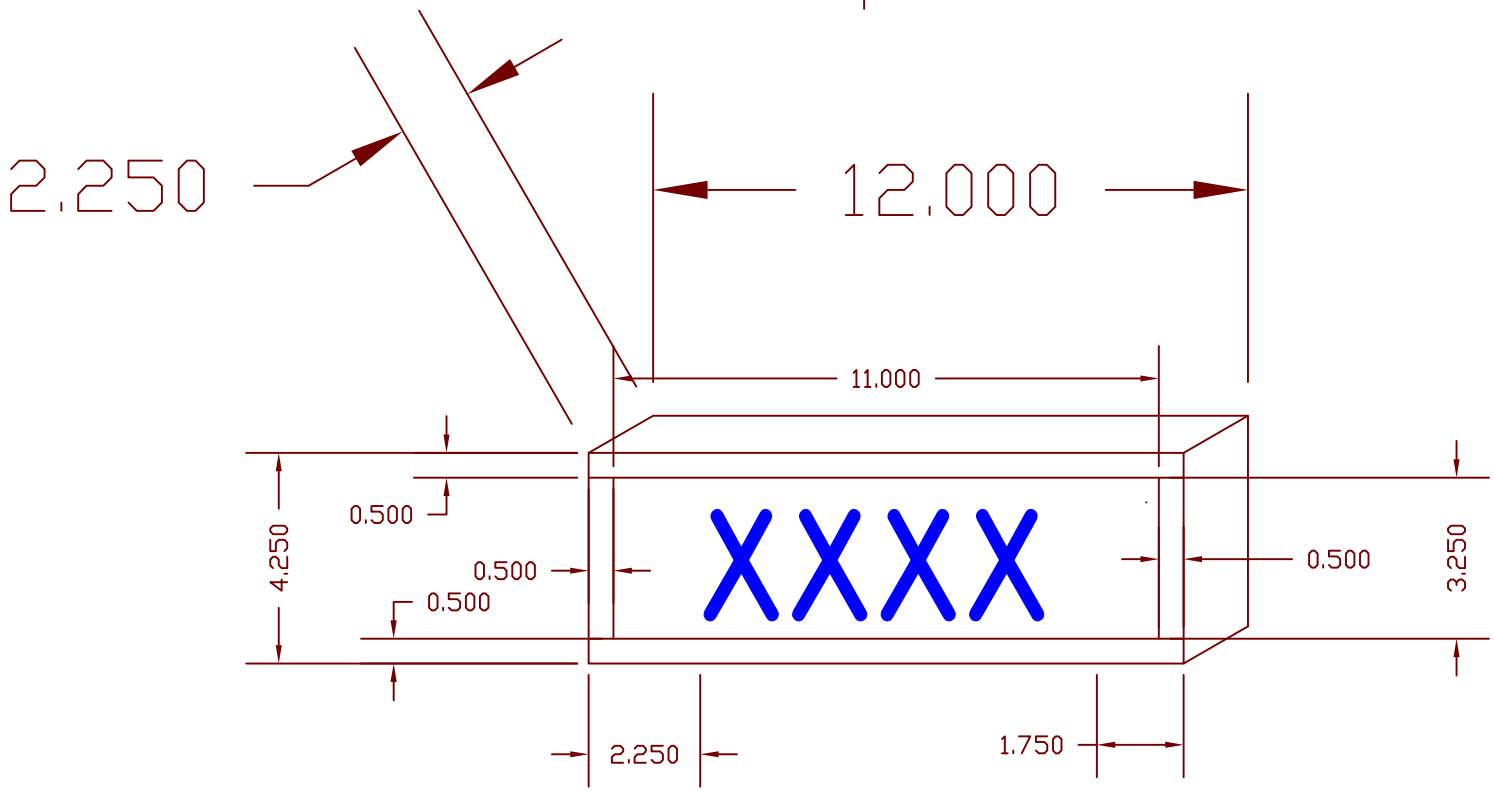

EDI Inc.
135 S CHURCH
ADDISON IL60101
ph#630 628-0658

ED206-105-4D-N1

APPROVED BY:	SIZE	FSCM NO.	DWG NO.	REV
	A		R:\SALES\ED206-105-4D-N1	0
DRAWN BY: HENRY BILITZKI	SCALE NONE		SHEET	