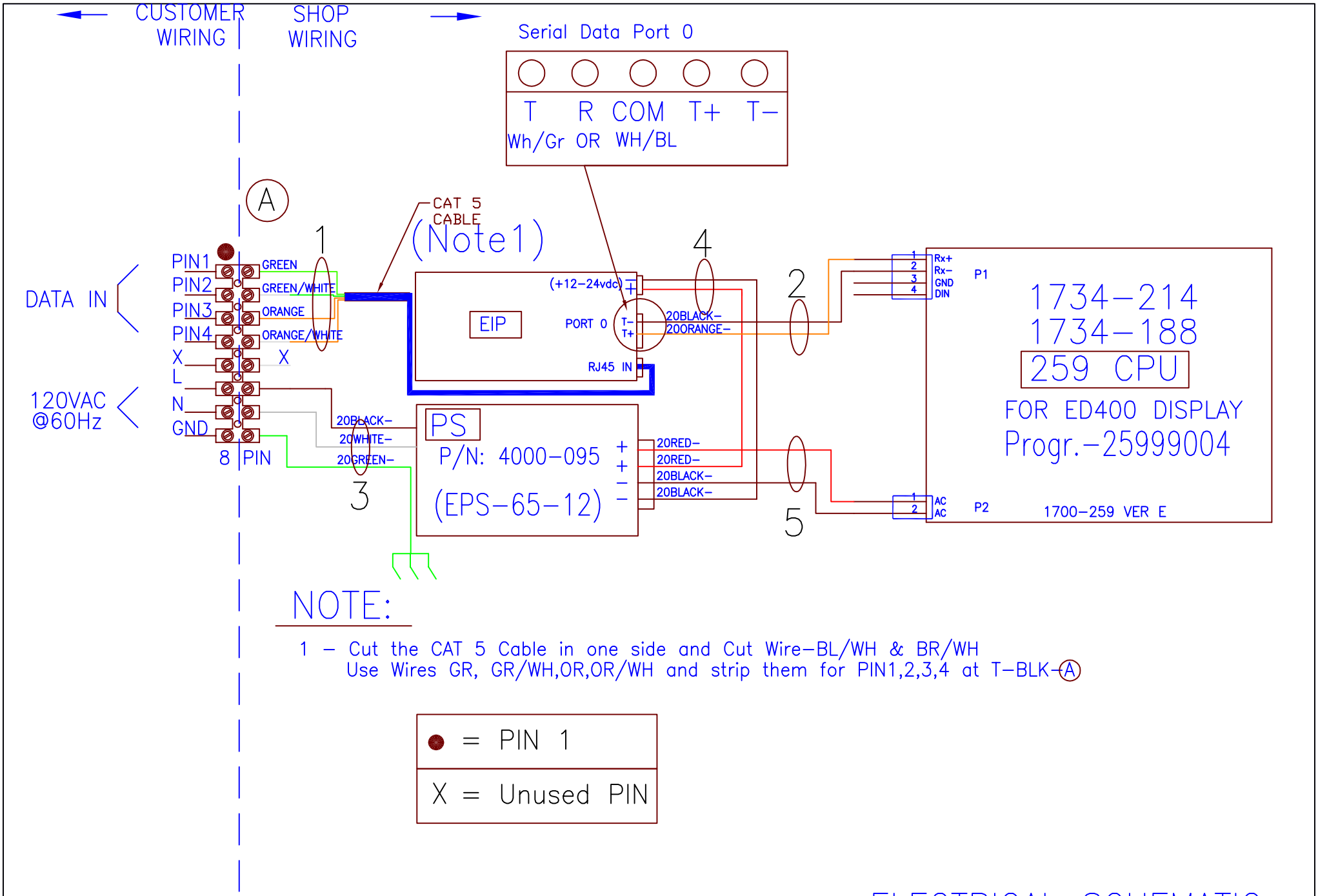

NOTE:

1 − Cut the CAT 5 Cable in one side and Cut Wire−BL/WH & BR/WH
Use Wires GR, GR/WH,OR,OR/WH and strip them for PIN1,2,3,4 at T−BLK−A

● = PIN 1

X = Unused PIN

ELECTRICAL SCHEMATIC

DRAWN BY: m. Bushi		R:\WIRING\ED400D−E−EIP−8D−N4