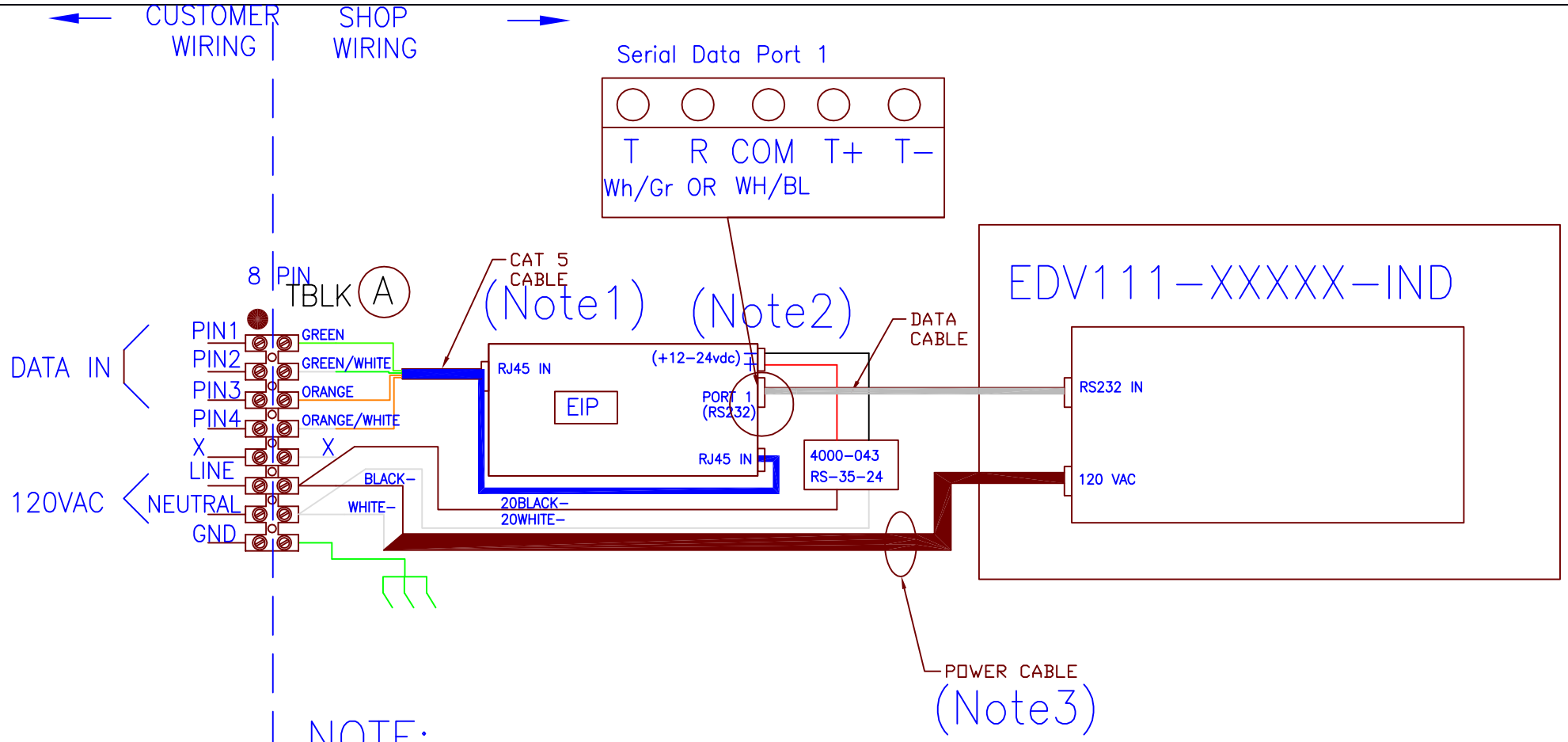

NOTE:

1 − Cut the CAT 5 Cable in one side and Cut Wire−BL/WH & BR/WH
Use Wires GR, GR/WH,OR,OR/WH and strip them for PIN1,2,3,4 at T−BLK−A

2 − Use the Data Cable that Comes with the sign
Cut one side of the Data Cable and strip 3 out of 6 wires
Use WH/GR, Orange, WH/BLUE only (See Detail)

3 − Use the Power Cable and strip it in one side that is going at the TBLK−A

● = PIN 1	
X = Unused PIN	

ELECTRICAL SCHEMATIC

DRAWN BY: m. bushi		R:\WIRING\EDV111-XXXXX-IND-EIP-N4